AIRLOCK
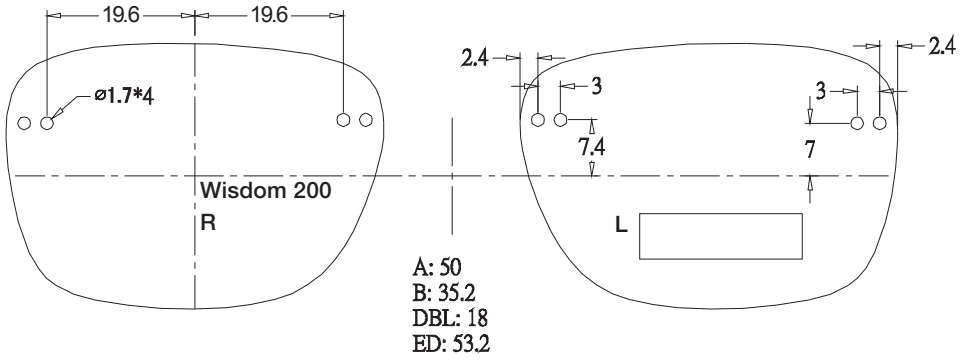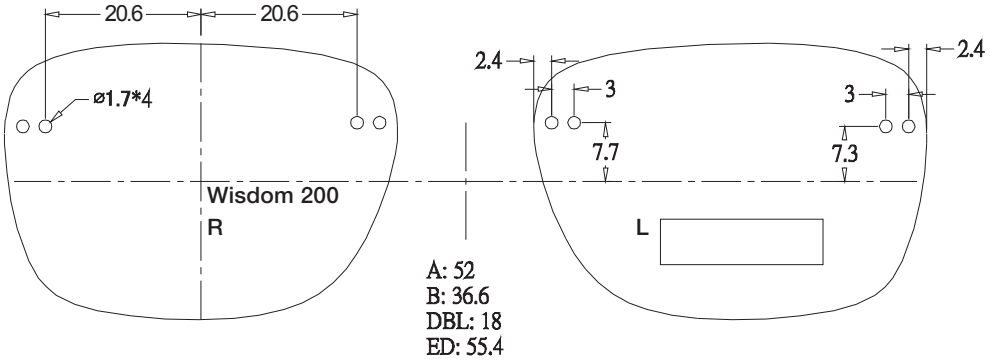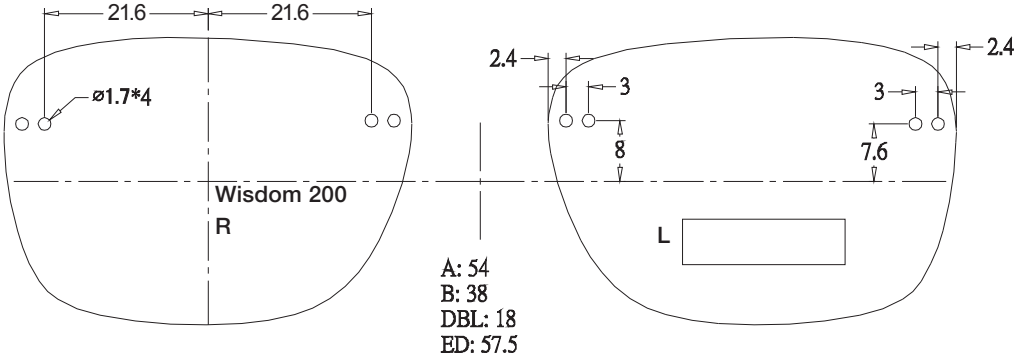
WISDOM 200