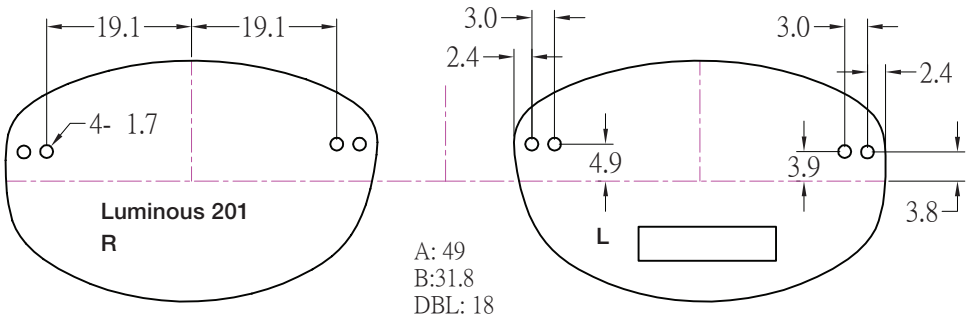

A: 49
B:31.8
DBL: 18
ED: 50.4

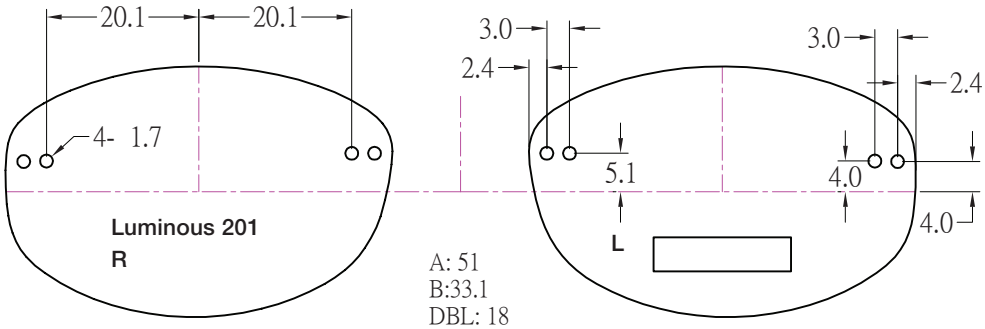

A: 51
B:33.1
DBL: 18
ED: 52.4

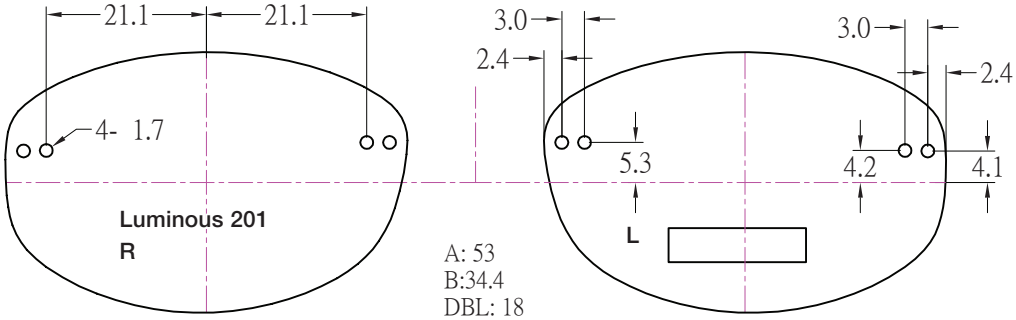

A: 53
B:34.4
DBL: 18
ED: 54.5