AIRLOCK®
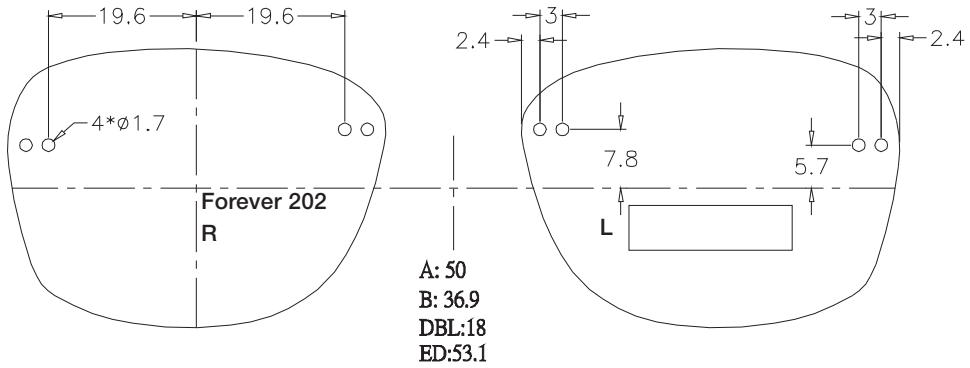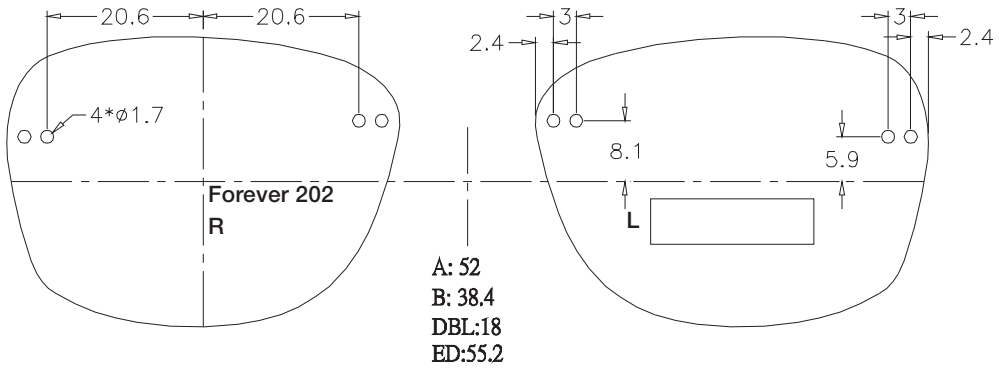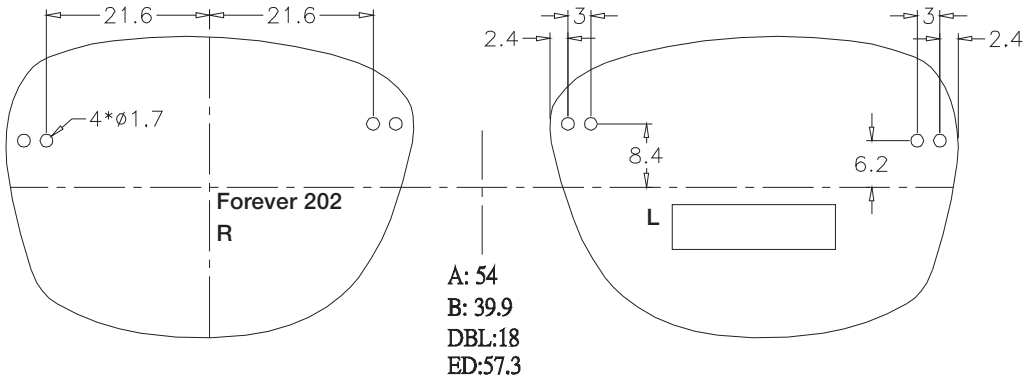
FOREVER 202