AIRLOCK
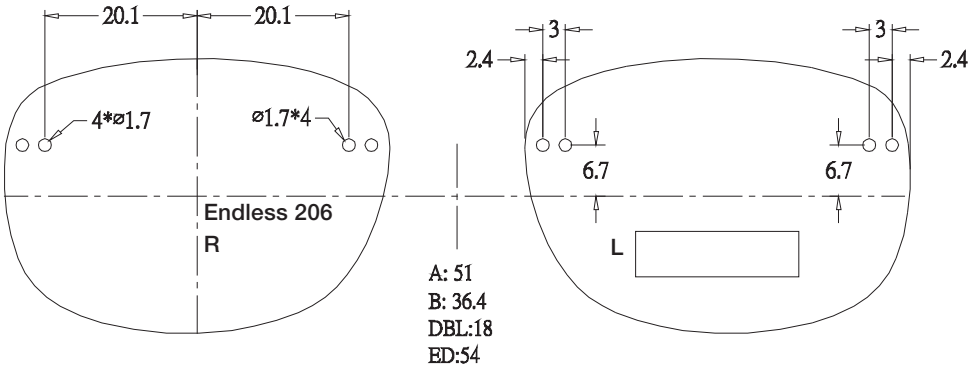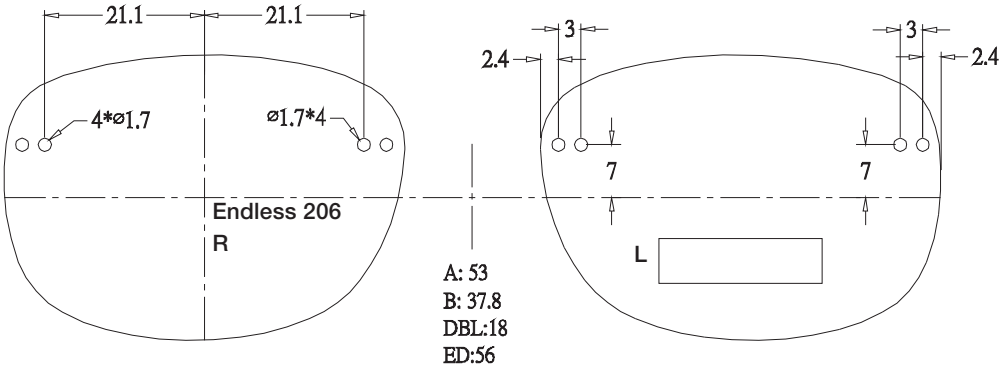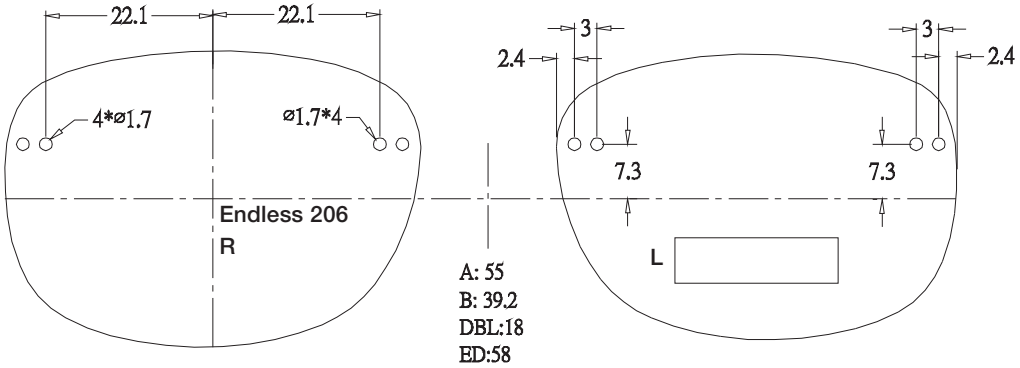
ENDLESS 206