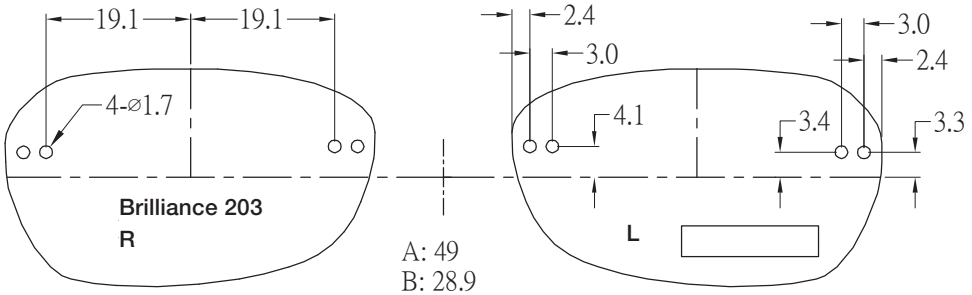

A: 49
B: 28.9
DBL: 18
ED: ⌀50.5

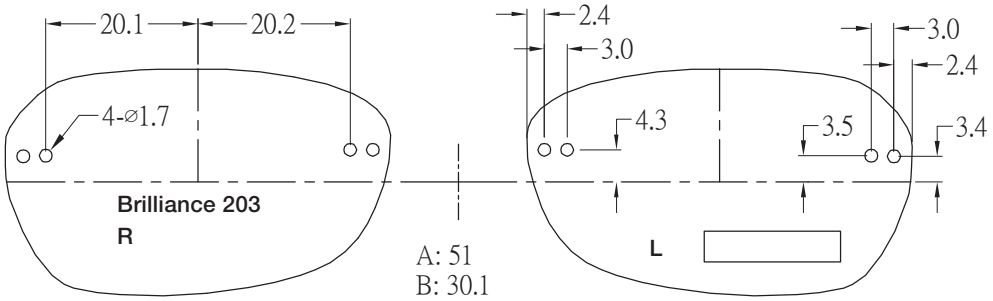

A: 51
B: 30.1
DBL: 18
ED: ⌀52.6

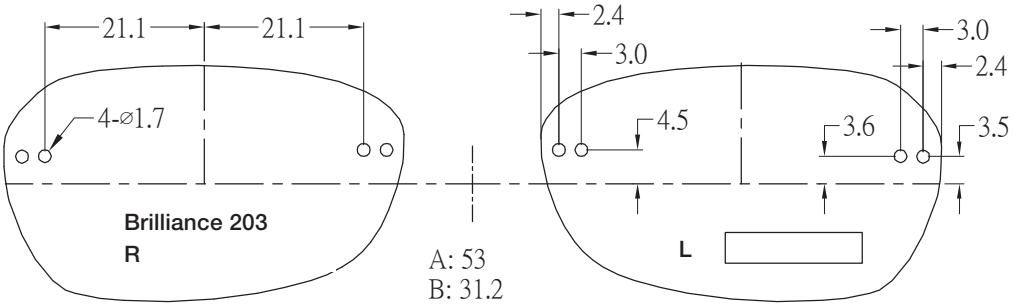

A: 53
B: 31.2
DBL: 18
ED: ⌀54.7