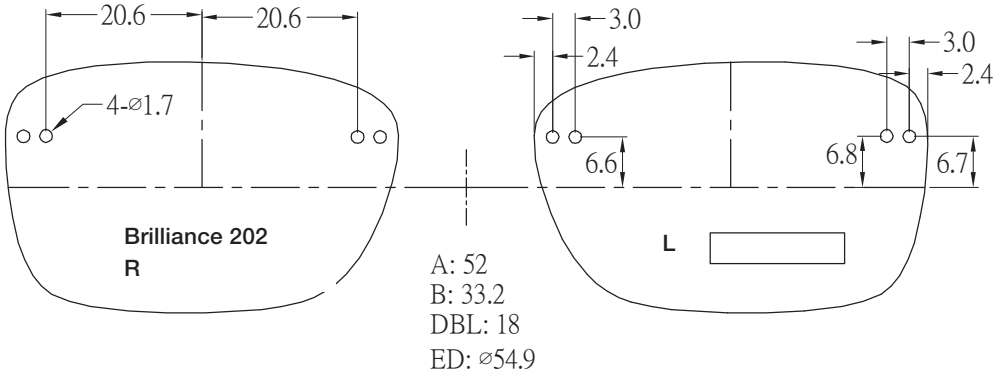
20.6
20.6
4-⌀1.7
3.0
2.4
3.0
2.4
6.6
6.8
6.7
Brilliance 202
R
L
A: 52
B: 33.2
DBL: 18
ED: ⌀54.9

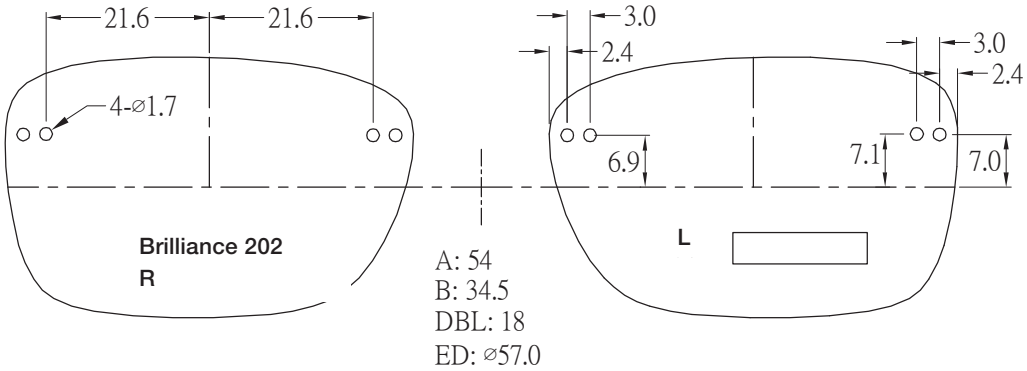
21.6
21.6
4-⌀1.7
3.0
2.4
3.0
2.4
6.9
7.1
7.0
Brilliance 202
R
L
A: 54
B: 34.5
DBL: 18
ED: ⌀57.0

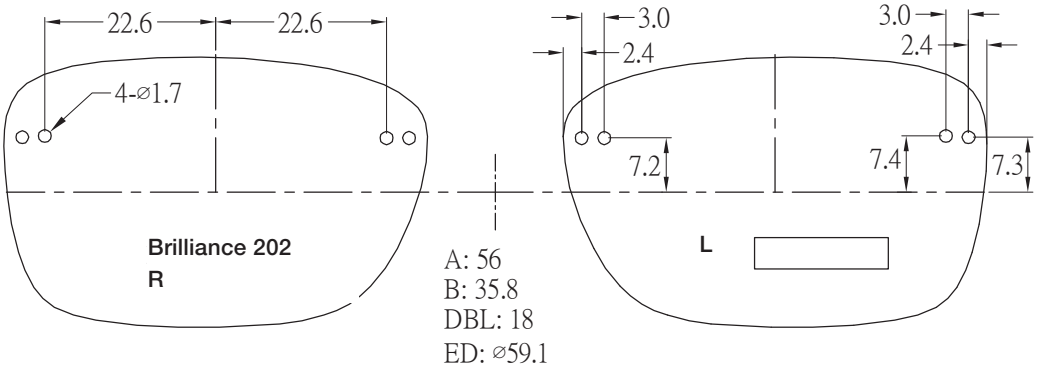
22.6
22.6
4-⌀1.7
3.0
2.4
3.0
2.4
7.2
7.4
7.3
Brilliance 202
R
L
A: 56
B: 35.8
DBL: 18
ED: ⌀59.1